Trio GENERATOR

Perkins

MADE IN TURKEY

OUTPUT VALUES

Standby Power	Voltage	230/400
Standby Power	kVA	500
Standby Power	kW	400
Standby Power	Amper	720
Prime Power	Voltage	230/400
Prime Power	kVA	450

Prime Power	kW	360
Prime Power	Amper	648

DIESEL ENGINE

Brand	PERKINS
Model	2506A-E15TAG1
Max. Total Output Pow. (kWm/hp)	451/604,55
Cylinder Displacement (lt)	15,2
Cylinder Orientation	6 Single Line
Bore x Stroke(mm*mm)	137 X 171
Compression Ratio	16.1:1
Governor Type	ECM
Rotation	1500 RPM
Aspiration System	Natural
Injection	Direct
Cooling System	Water Cooled
Electrical System(V DC)	24
Oil Capacity (lt)	62
Engine Coolant Capacity (lt)	50
Fuel Cons. %50 (lt/h)	50
Fuel Cons. %75 (lt/h)	72
Fuel Cons. %100 (lt/h)	95

ALTERNATOR

Standby Power (kVa/kw)	500/400
Prime Power (kVa/kw)	450/360
Brand	LEROY SOMER
Output Voltage (V)	231/400
Frequency (Hz)	50
Stationary Vol. Regulation(±)	0,01
Short Circuit Current	%300 (10 sec)
Insulation	H
Protection	IP23
E ciency (%)	92
Overloading	110% for 1 hour
Power Factor (cos Q=0.8)	0,8
Tot. Harmonic Dist. Rate	<1 %
Connection Type	Star
Number of Pole	4
Number of Bearing	Single

DIMENSIONS & WEIGHT

Without Canopy	Width	1500 mm
Without Canopy	Length	3500 mm
Without Canopy	High	2200 mm
Without Canopy	Weight	3150 kg
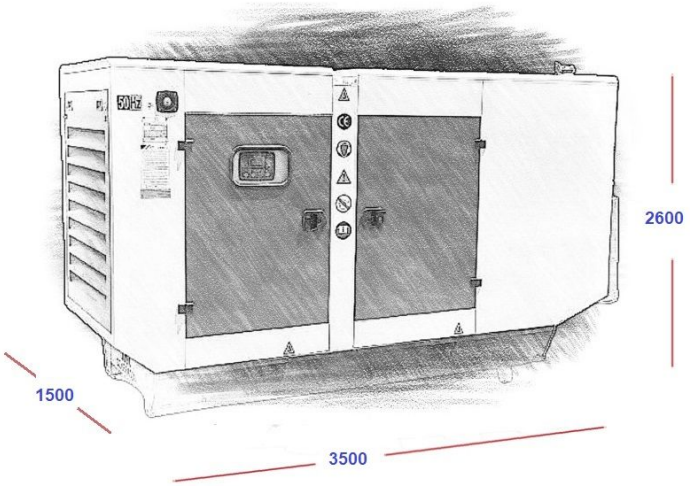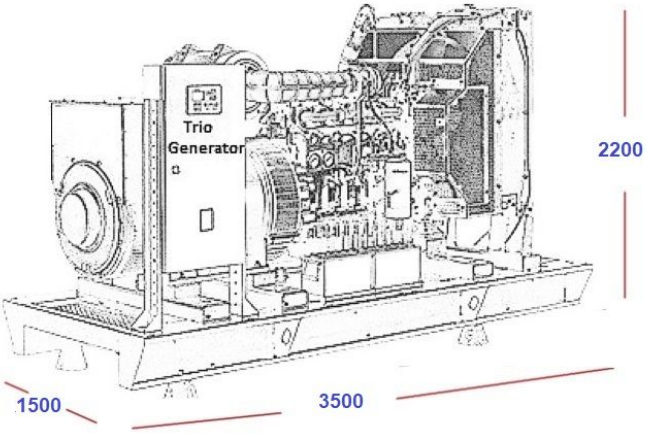
Without Canopy	Fuel Tank Capacity	660 lt
With Canopy	Width	1500 mm
With Canopy	Length	3500 mm
With Canopy	High	2600 mm
With Canopy	Weight	4610 kg
With Canopy	Fuel Tank Capacity	660 lt